WHEELS, FRONT/REAR - Z26SPD92AN/AH/BN/BH (C750870)

2026 RZR - RZR PRO S ULTIMATE (R01) - Z26SPD92AN/AH/BN/BH

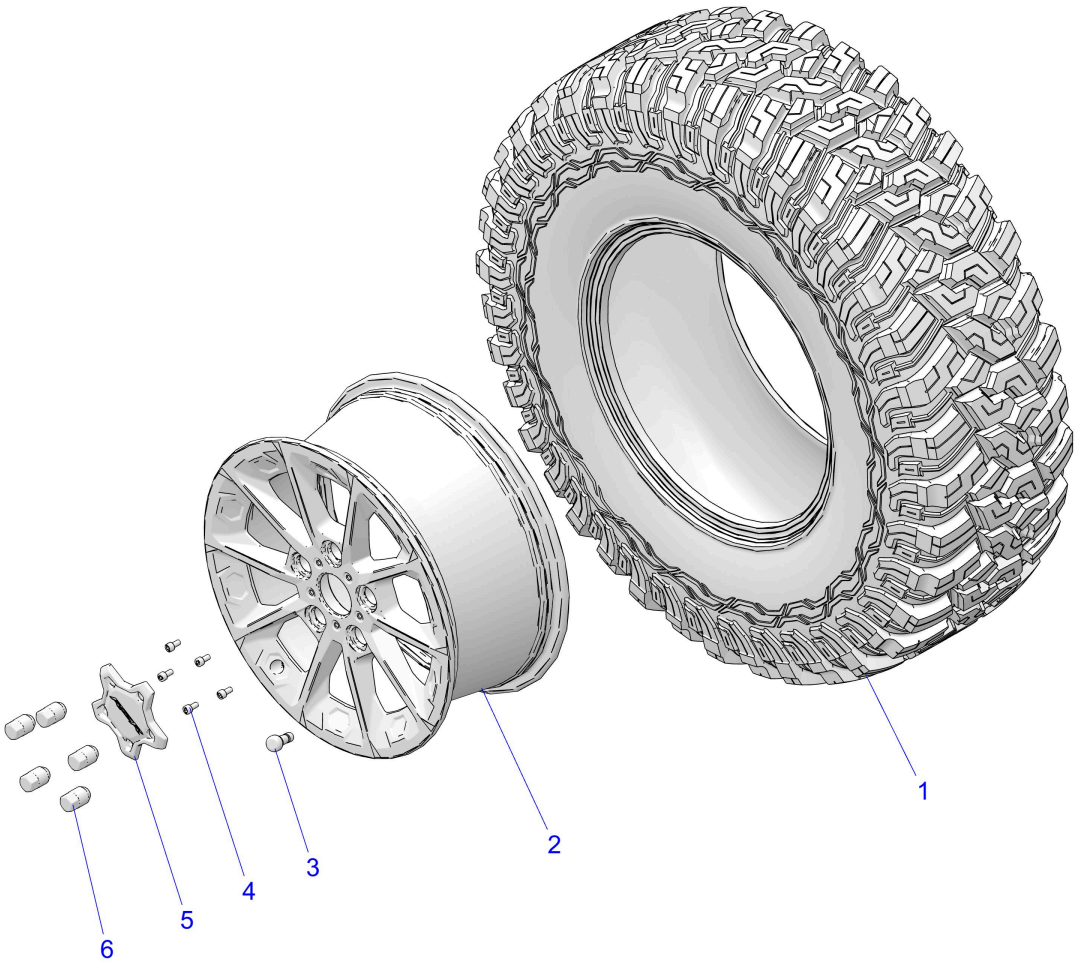

© 2025 Polaris Industries Inc.

C750870

Reference #	Part#	Description	Quantity
1	5419239	TIRE-TREKKER,RADIAL,32X10R15	4
2	1525534-744	RIM-15X7,CAST,MFB [FLASH BLACK]	4
3	1521982	VALVE-RIM	4
4	7528297	SCR-SH-M6X1.0X12 10.9 ZNB	20
5	1525535-744	CAP-RIM 5 LUG,MFB [FLASH BLACK]	4
6	7547816	NUT-WHEEL,M12X1.5,TAPERED,BLK	20

Copyright 1996-2026 Polaris Industries U.S.A All rights reserved.